Application Analysis of Intelligent Control in Mechatronic System

Xu Wang, Yilong Liao*

Mingde College of Guizhou University, Guiyang, Guizhou 550025, China

*corresponding author

Keywords: Intelligent control, Numerical control technology, Mechanical and electrical integration

Abstract: With the deepening and development of reform and opening up, the mechatronics system, which occupies an important position in China's production mode, has been greatly updated and improved with the help of the ever-changing scientific and technological means. As an important part of mechatronics system, intelligent control system has a decisive influence on the overall performance of the system. Numerical control technology is the most important thing in modern manufacturing industrialization. As a country's industrial base, numerical control technology and numerical control device will directly affect the country's industrial development. The rapid development of computer technology and its application in the field of NC machining greatly promote the development level of machining technology automation. More and more intelligent control methods have been applied in mechatronics system, and the research of intelligent control in mechatronics system has been paid more and more attention.

1. Introduction

Numerical control system is the core of mechatronics system, and the intelligent control system in mechatronics system directly affects the performance of the whole control system. Therefore, the standard design should be carried out according to the principle of intelligent control, so that the intelligent control system in mechatronics system can ensure the safe and reliable operation of mechatronics system [2]. Because the mechatronics system is an automatic equipment with high precision and high efficiency, it can provide higher production efficiency for the production of mechatronics system [3]. However, if there are problems and major failures in this system, the losses it brings are immeasurable. After long-term development, the current mechatronics technology has closely integrated mechanical technology with microelectronic technology. The emergence and application of this technology makes the cold and numb machines become humanized and intelligent. With the development of advanced manufacturing technology, machine tools are required not only to have superior performance and high automation function, but also to have maintainability, reliability, maintainability and maintainability of performance and function, that is, to have credibility [4]. The quality of the intelligent control system in the mechatronics system determines the performance of the control system. In the use of electromechanical integration systems to process multiple varieties, the use of CNC machining can achieve a degree of fast processing progress and high automation efficiency [5].

Under the market economy atmosphere with increasingly fierce social competition, the use of mechatronics production mode can improve the overall competitiveness of enterprises, because the mechatronics system completely get rid of the excessive cost of traditional production mode, the production efficiency is low and the product Poor quality and many other issues that affect business development. The rapid development of integrated circuit technology has laid a solid foundation for the development of mechatronics technology. At the same time, the mechatronics technology has become more and more mature and has been extremely widely used. We should actively use the development opportunities of advanced technology to better serve the development of the machinery manufacturing industry, and strive to catch up with the technological level of developed countries in the shortest time [6]. With the development of advanced manufacturing technology, not only are machine tools required to have superior performance and a high degree of automation, but

  DOI: 10.25236/mmmce.2020.041

also maintenance, reliability, maintainability, and maintenance supportability of performance and functions are required, that is, machine tools must be credible [7]. From the perspective of development, the modern automatic production equipment widely used by people is almost the product of mechatronics technology. As a new technology born from the development trend of social production mode, intelligent control is of great significance in the mechatronics system. Based on the application of intelligent control in the mechatronics system, this article starts research and discussion.

2. Basic Connotation and Development Demand of Mechatronics

The key link of computer information processing technology from mechatronics to intelligent control is the level of computer information processing, and the intelligent development of computer technology is closely related to the development of microelectronics and the upgrading of information processing equipment. In order to meet the needs of industrial market, traditional intelligent control machine tools are gradually replaced by mechatronics systems. Using numerical control technology for intelligent control can improve production efficiency and machining accuracy, and save the requirement for labor. In the field of modern intelligent control, NC machining technology has gradually been widely promoted. It quickly occupied the market with the characteristics of high precision, high efficiency and low cost. The rapid development of computer information technology and its continuous application in the field of NC machining have greatly promoted the development level of intelligent control automation technology in China. An important way to realize the transformation of intelligent control manufacturing industry from tradition to modernization is to widely apply NC machining technology to modern intelligent control industry and become the core technology of its manufacturing. The application of numerical control technology in industry can be said that while ensuring safe production, it can accomplish tasks that are sometimes difficult for human beings to accomplish with good quality and quantity. In order to make mechatronics develop in the direction of intelligence, we should first continuously improve the reliability of computer information processing equipment, not only the reliability of conversion equipment, but also the reliability of time-sharing processing input and output equipment, so as to fundamentally improve the speed of information processing and solve the problems of anti-interference and standardization.

The development of intelligent control technology automation is actually the result of many factors. Among them are the development of social economy and the renewal of science and technology. The application of numerical control technology in machine tool equipment usually relies on code to complete control. Through programming, various sequential actions such as spindle, speed change, tool selection and cooling pump start and stop are completed. Improving Work Efficiency The integration of intelligent control and mechatronics can not only optimize the operation process, but also shorten the processing time and improve the work efficiency. Power supply circuit is an important factor that directly affects the running state of mechatronics system. It must strictly comply with the requirements of relevant electrical standards, fully consider the actual needs of machine tools, and optimize its design [9]. Workflow is the calculation model of workflow, which represents the tasks in the process. What kind of logic or rules are connected in series, and what kind of model is used to express and calculate. Although the informatization level of each subsystem is constantly improving, the coordination among the subsystems is poor, and only the information within their own scope is focused. People can identify the wear and tear of mechanical equipment, and at the same time, they can apply expert system to diagnose the fault of mechanical equipment. CNC machine tools generally meet the needs of multi-axis and multi-control machining through intelligent control, which effectively reduces the number of manual operations and has been optimized and improved in the machining program.

3. Integration of Intelligent Control and Mechatronics

The development of mechatronics provides corresponding technical support for the numerical

control field, and the integration of intelligent control can improve the control effect, and can realize certain extended, simulated and extended knowledge processing functions. Most CNC computer equipments are embedded computer systems, which not only have the functions of interface units matched in mechatronics systems, but also have the structure of functional modules. Only through the database system and computer network can we realize the ability of sharing and remote interactive access of processing quality information among each member and within each enterprise. Sampling inspection shall be carried out before the raw materials enter the warehouse, so as to obtain that the theoretical components of the incoming inspection sheet are consistent with those of the incoming inspection sheet. The application of numerical control technology has improved the control ability of machine tool processing, and the production efficiency of machine tool processing can be greatly improved by using numerical control technology to complete the control in the process of intelligent control using machine tools. Intelligent control quality information is physically distributed in different departments, regions and countries. The market economy is constantly developing towards internationalization, and the economic and technical exchanges between countries in the world are becoming more frequent, which not only creates development opportunities and opens up marketing markets, but also brings great challenges to industrial industries [10]. When using the equipment, the moving components of each coordinate are transmitted to the corresponding driving power supply, and the cutting movement of the machine tool keeps moving towards the programmed path.

Project quality control refers to the control of the progress of each stage and the final completion period of the project in the process of project implementation. The application of numerical control technology in industrial production is mainly reflected in the production line of mechanical equipment, so as to realize the large-scale integrated production of products. In which the process duration obeys lognormal distribution. Figure 1 shows the planning results of critical chain method.

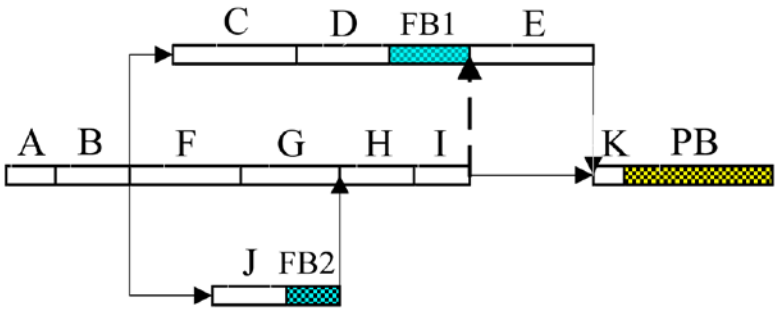

Fig.1 Key Chain Planning Results

Each behavior has its own goal or task, and its input can be used as the sensor information of agents or the output of other behaviors in the system. Accordingly, the output of each agent is sent to its actuator to control the formation of agents. Because of its particularity, multi-agent visual positioning must be able to transmit information anytime and anywhere, monitor and analyze data accurately, and realize efficient interaction through the network. Data acquisition, visual positioning and data receiving modules transmit data through interfaces. The data format is shown in Table 1.

Table 1 Data Format

Name	Length
Start flag	6
Data length	6
Command word	7
Data part	10
Termination code	8

The application of intelligent control in AC servo system is called servo drive device, which is an extremely important component of mechatronics products and plays a vital role in control quality and dynamic performance of the system. Intelligent control can maximize the automation efficiency

of mechanical equipment operation. Thereby serving modern machining more conveniently and quickly. To complete a task, it is necessary for relevant personnel from different departments and fields to participate in cooperation. Similarly, the system also needs to coordinate the workflow and progress of each participant through workflow. For nonconforming products or batches found by quality inspection, it is necessary to start the quality trial procedure. The wide application of NC machining technology in machine tools has realized the digitalization of machine tools. It not only improves the production efficiency of the machine tool, but also improves the controllability of the machine tool, and can realize the processing of objects in any form. Compared with traditional machining technology, NC machining technology has some incomparable advantages. If intelligent control technology can be widely applied to AC servo system and combined with modern AC servo system, the performance of indexes can be greatly improved. The basic theory of machining and quality control mainly analyzes the connotation and characteristics of machining, the connotation of machining control and quality control methods. Combining with modern intelligent control on the basis of the original machine tools can not only improve the quality requirements of modern industrial machining, but also save energy and economic costs.

4. Conclusions

Intelligent control technology in mechatronics system is widely used in various industries in China, which can not only reduce the labor intensity of workers and improve the production efficiency of enterprises, but also improve the utilization rate of materials and reduce the production cost. Intelligent control is slowly replacing the traditional control mode in mechatronics system because of its high performance, high efficiency, high water level and advantages, and has become one of the most widely used main control modes in mechatronics system. Because there are many kinds of mechatronics systems, the structures and functions of mechatronics systems for different purposes are different. As the core component of mechatronics system, intelligent control system has a decisive influence on the overall performance of machine tools. The application of numerical control technology in machining manufacturing industry gets rid of the shackles of traditional machinery manufacturing industry and the traditional control of mechanical production by relying solely on manpower. Intelligent control is the main development direction of mechatronics technology in the future for a long time. In the mechanical manufacturing industry, people should actively strengthen the research of intelligent control system in mechatronics system, realize automation and intelligence of mechanical manufacturing, and continuously improve the industrial production level of our country.

References

[1] Yang Mei. The application of intelligent control in the mechatronics system. Mingchenghui, No. 4, pp. 534-534, 2018.

[2] Liu Zehua, Zhao Li. Intelligent control and its application in mechatronics system. Communication World, No. 018, pp. 232-233, 2015.

[3] Wu Ye. Intelligent control and its application in mechatronics system. Automation Application, No. 006, pp. 27-28, 31, 2016.

[4] Yang Yang, Liu Bing. Application Analysis of Intelligent Control in Mechatronics System. Theoretical Research on Urban Construction (Electronic Version), No. 022, pp. 16-17, 2017.

[5] Condensation. Analysis of the application of intelligent control in the mechatronic system. Theoretical Research on Urban Construction (Electronic Edition), Vol. 005, No. 024, pp. 2841-2842, 2015.

[6] Zhang Hualin. Application Analysis of Intelligent Control in Mechatronics System. South Agricultural Machinery, Vol. 049, No. 001, pp. 114-116, 2018.

[7] Li Zhiwei. Research on the application of intelligent control in the mechatronics system. Information Recording Materials, Vol. 20, No. 02, pp. 83-84, 2019.

[8] Guo Jinlong, Hu Jing. Intelligent control and its application in mechatronics system. Agricultural Machinery Use and Maintenance, No. 4, pp. 69-70, 2018.

[9] Yang Shuang. Talking about the application of intelligent control in the mechatronic system. Science and Technology Innovation, No. 04, pp. 185-186, 2018.

[10] Niu Ningwei. Application of intelligent control in mine electromechanical integration system. World Nonferrous Metals, Vol. 507, No. 15, pp. 53+55, 2018.